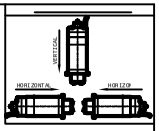

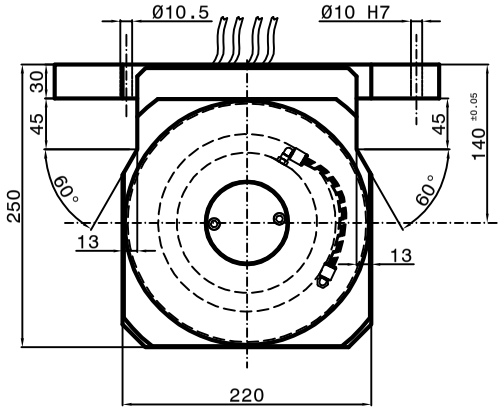

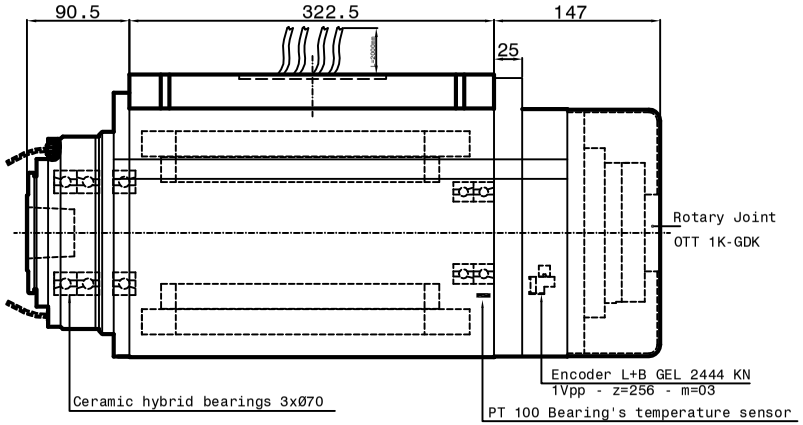

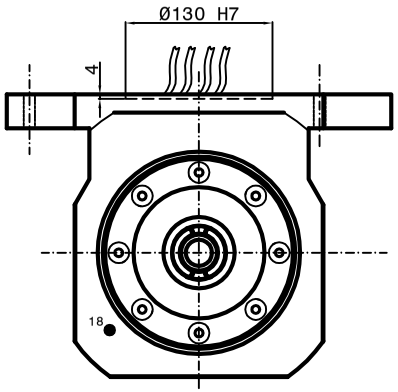

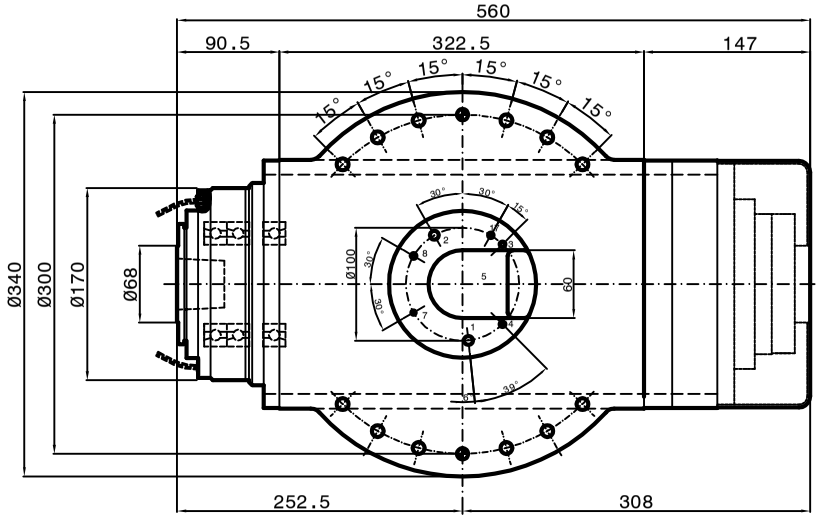

Grease bearings lubrication

Coolant Capacity = 4150 Watt

SPEED	RPM	1000	2000	2500	7800	12000
FREQUENCY	Hz	71	137	174	530	800
POWER (S1)	KW	13	26	26	26	14
TORQUE (S1)	Nm	124	124	96	32	11
TENSION (S1)	V	155	300	380	380	380
CURRENT (S1)	A	69	68	57	51	35
POWER (S6-60% 2 min.)	KW	15	30	30	30	14
TORQUE (S6-60% 2 min.)	Nm	144	144	111	45.3	11
TENSION (S6-60% 2 min.)	V	155	300	380	380	380
CURRENT (S6-60% 2 min.)	A	81	77	63	59	38

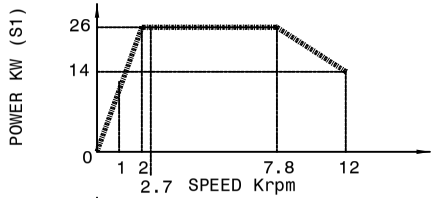

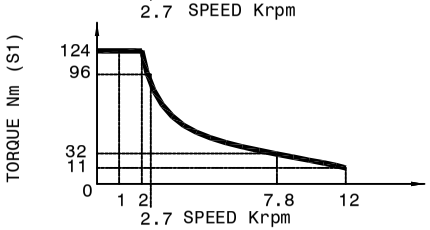

Asyncronus Motor:8 poles

Runout taper 0.002mm

1-Coolant inlet (Ø8)(3-4 bar)(8 L/min.)
2-Coolant outlet (Ø8)
3-Hydraulic pressure unclamping
tool (min 80bar - max 90bar) (Ø5)
4-Hydraulic pressure clamping
tool (Return piston)(10bar max) (Ø5)
5-Elettric connection
3 Phases motor - Earth
phase U Ø5.5
phase V Ø5.5
phase W Ø5.5
earth Ø5.5
-Outlet sensor's cables (S6)
S6 = Analogic Sensor Balluff
-PT 100 Bearing's temperature sensor
-Outlet encoder's cables (Gel 2444 KN)
-Motor thermal switch (N°1 PT 1000)
7-Front-side pressurization filtred (5µm)
(1-1.5 bar) (Ø4)
8-Tool cooling water (Ø5)(20 bar)
17-Tool's lubro refrigerant inlet by rotary(80 bar)
joint(Ø5)
-Inlet air arbor's cleaning (6 bar)
18-Rotary joint leackage outlet

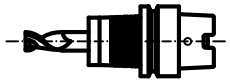

Tool holder HSK A 63
DIN 69893

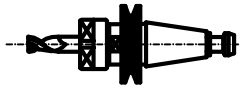

Tool holder ISO/BT 40

Peron Speed INTERNATIONAL

SUBJECT:PSI ES-203-SP

CUSTOMER :

Sheet:1/1 | DIS.N°4973-00-02 | DATE :