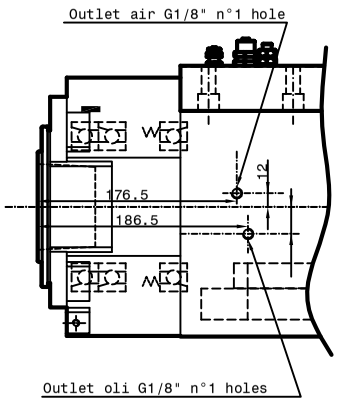

Vista da B

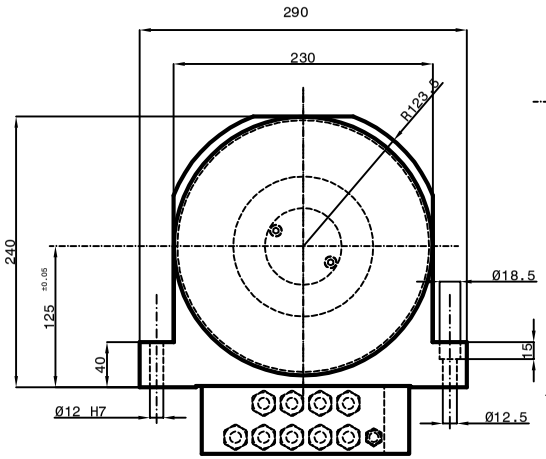

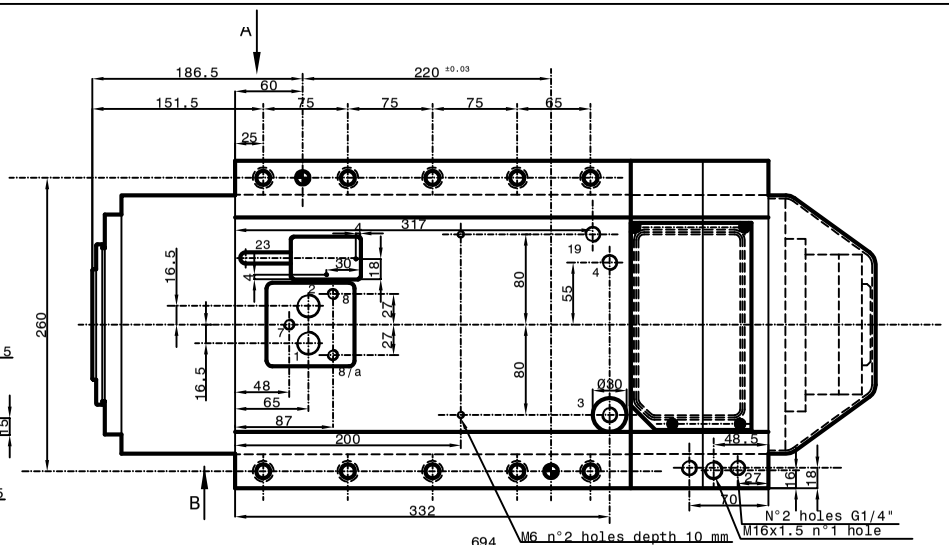

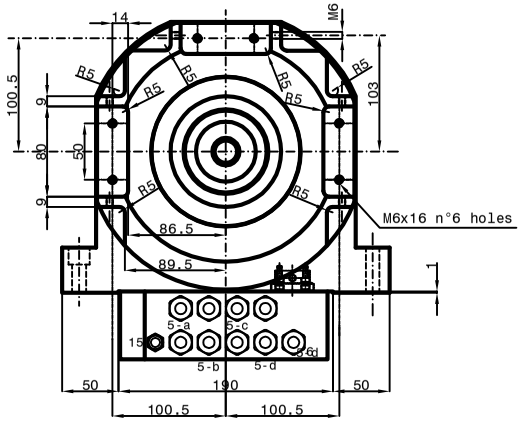

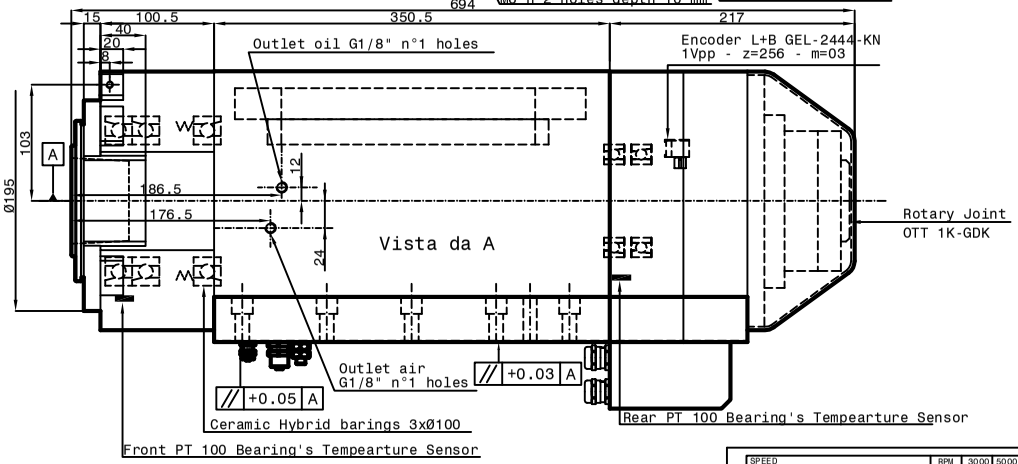

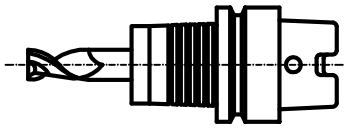

Tool holder HSK A 100
DIN 69893

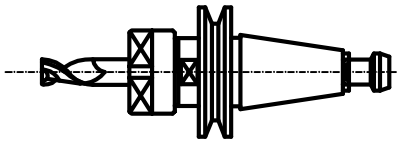

Tool holder ISO/BT 50

Grease Bearings Lubrication

Cooling capacity=9650 Watt

1-Coolant inlet (G1/2")(3-4 bar)(20 L/min.)
2-Coolant outlet (G1/2")
3-Hydraulic pressure unclamping
tool (min 80bar - max 90bar) (G1/4")
4-Inlet air pressure clamping
tool (Return piston)(6bar max) (G1/4")
5-Elettric connection (L=4500)
3 Phases motor - Earth
5/a Phases motor U n°2 cables Ø10.5 IGUS CF ROBOT.035
5/b Phases motor V n°2 cables Ø10.5 IGUS CF ROBOT.035
5/c Phases motor W n°2 cables Ø10.5 IGUS CF ROBOT.035
5/d Earth n°2 cables Ø10.5 UNIDRAL FFRR 1x16
6-Outlet sensor's cables (S1-S2-S4)(L=4500mm)UNIDRAL 2510-C-Ø10.5
S1 PNP = Toolholders clamped Ø4
S2 PNP = Piston under pressure ready
to receive tools arbor Ø4
The electrospindle can not turn.
S4 PNP = Toolholders not clamped Ø4
The electrospindle cannot turn.
-PT 100 Bearing's temperature sensor
7-Front-side pressurization filtred (5µm)
(1-1.5 bar) (Ø4)
8-Inlet oil tool cooling esternal (G1/8")(20 bar)
8/a-Inlet ari tool cooling esternal (G1/8")(20 bar)
15-Outlet encoder's cables (Gel 2444 KN)(L=800mm)
-Motor thermal switch (N°1 PT 1000)
19-Tool's lubro refrigerant inlet by rotary(80 bar)
joint(G1/4")
-Inlet air arbor's cleaning (6 bar)
23-Outlet cable Spectra pulse

15

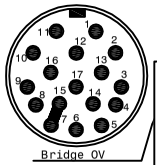

screen on carcass

1 white A+
2 brown A-
3 grey Ref+
4 not connected
5 not connected
6 not connected
7 blue 0V
8 white-red
thermal switch PT1000
9 white-red
thermal switch PT1000
10 red +5V Dc
11 pink B+
12 black B-
13 yellow Ref-
14 not connected
15 blue 0V
16 green 5V sensor
17 not connected

6

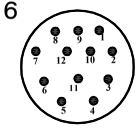

1 brown +24 V DC
2 blue 0 V DC
3 black S1 signal
4 black S2 signal
5 not connected
6 black S4 signal
7 rear PT 100
8 not connected
9 rear PT 100
10 front PT 100
11 not connected
12 front PT 100

SPEED	RPM	3000	5000	12000
FREQUENCY	Hz	204	333	800
POWER (S1)	KW	63	63	33
TORQUE (S1)	Nm	200	123	27
TENSION (S1)	V	380	380	380
CURRENT (S1)	A	126	117	63
POWER (S6-40% 2 min.	KW	78	78	33
TORQUE (S6-40% 2 min.)	Nm	248	180	27
TENSION (S6-40% 2 min.)	V	380	380	380
CURRENT (S6-40% 2 min.)	A	150	148	63

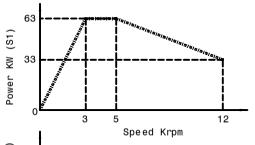

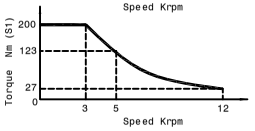

Asyncronous motor:8 poles
Runout taper 0.002mm

Peron Speed INTERNATIONAL

SUBJECT:PSI ES-207

CUSTOMER:

Sheet:1/1 | Dis.n°4666-00-09-H | DATE :