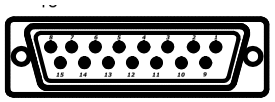

1 white A+
2 brown A-
3 grey Ref+
7 blue 0V
8 white-red thwemal switch PT 1000
9 white-red thwemal switch PT 1000
10 red +5V Dc
11 pinck B+
12 black B-
13 yellow Ref-
14 green 5V sensor
15 screen

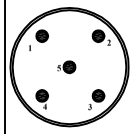

1 brown phase U
2 not connected
3 blue phase V
4 black phase W
5 yellow-green Earth
Screen on carcass

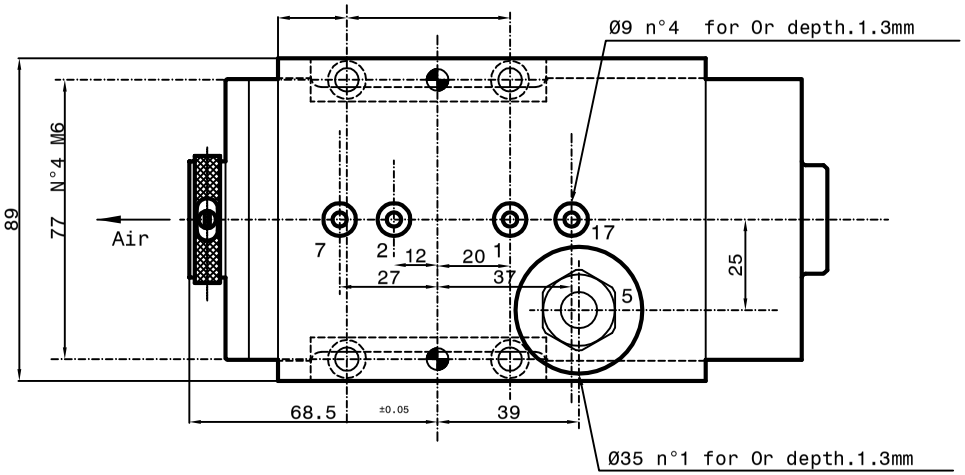

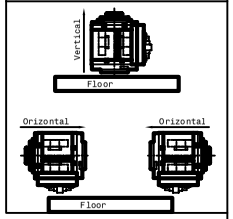

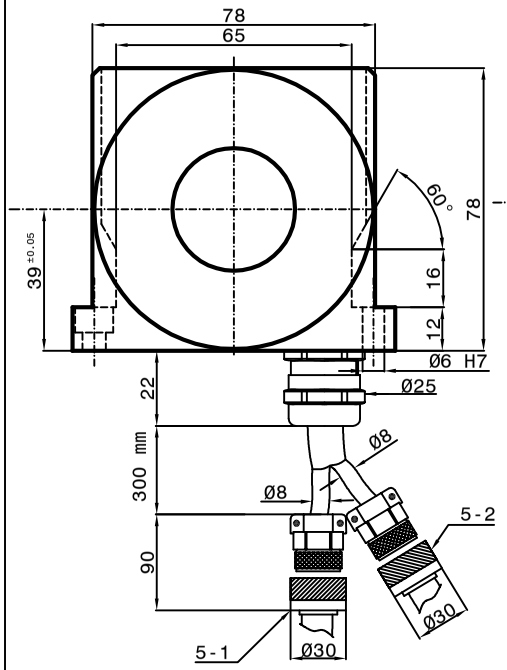

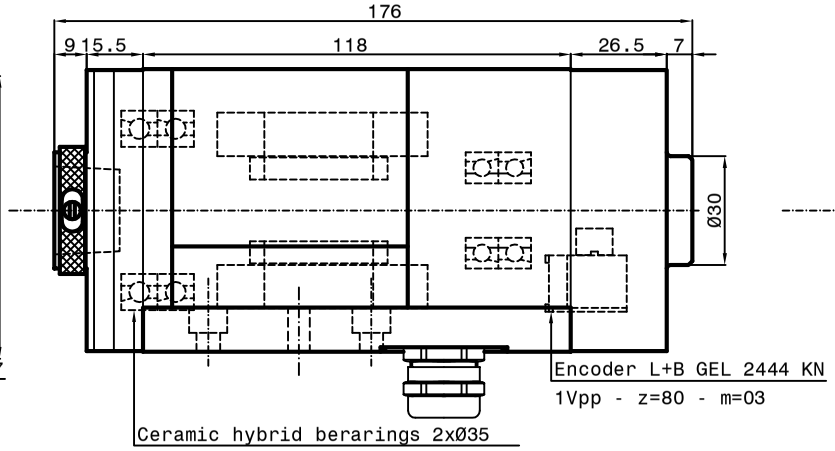

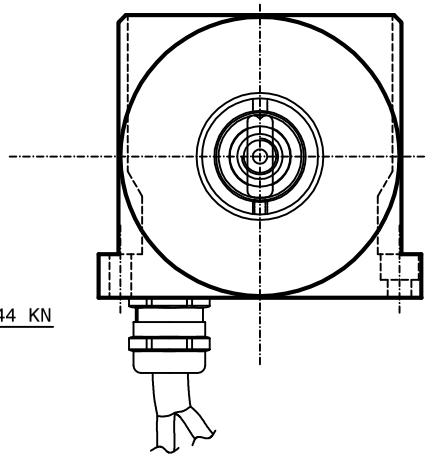

SPEED	RPM	20000	25000	30000	35000
FREQUENCY	Hz	333	416	500	583
POWER (S1)	KW	0.55	0.67	0.8	0.8
TORQUE (S1)	Nm	0.3	0.3	0.3	0.25
TENSION	V	147	183	220	220
CURRENT	A	3.4	3.4	3.4	3.1

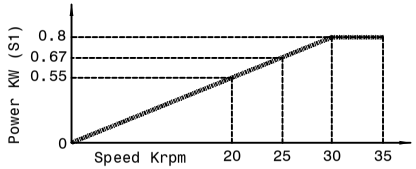

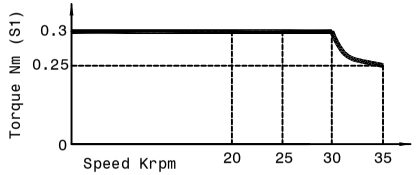

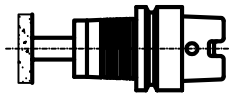

Tool holder
HSK-C 32 DIN
69893

Colling capacity = 220 Watt
Grease Bearings Lubrication

1-Coolant inlet (Ø4)(3÷4bar)(2÷3 l/min.)
2-Coolant outlet (Ø4)
5-1-Elettric connection
3Phases motor - Earth
5-2-Outlet encoder's cables (Gel 2444 KN)
-Motor thermal switch (N°1 PT 1000)
7-Front-side pressurization (Ø4)
Filtered air continuos inlet
(0.5μ) for rear protection
17-Inlet air continuos for
centre(Ø4)

Asyncronous motor : 2 poles
Runout taper 0.002 mm

Peron Speed INTERNATIONAL

SUBJECT:PSI RGV-78
CUSTOMER:

Sheet:1/1 | Dis.N°:3396-00-04 | DATE : 12/02/2023