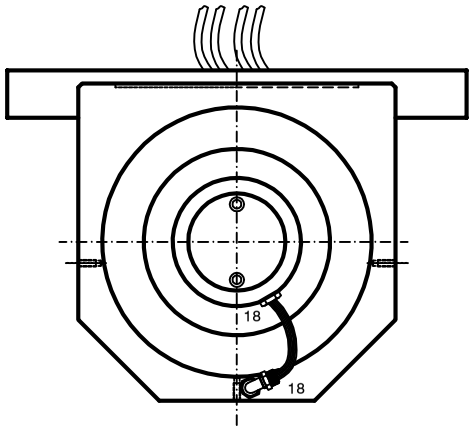

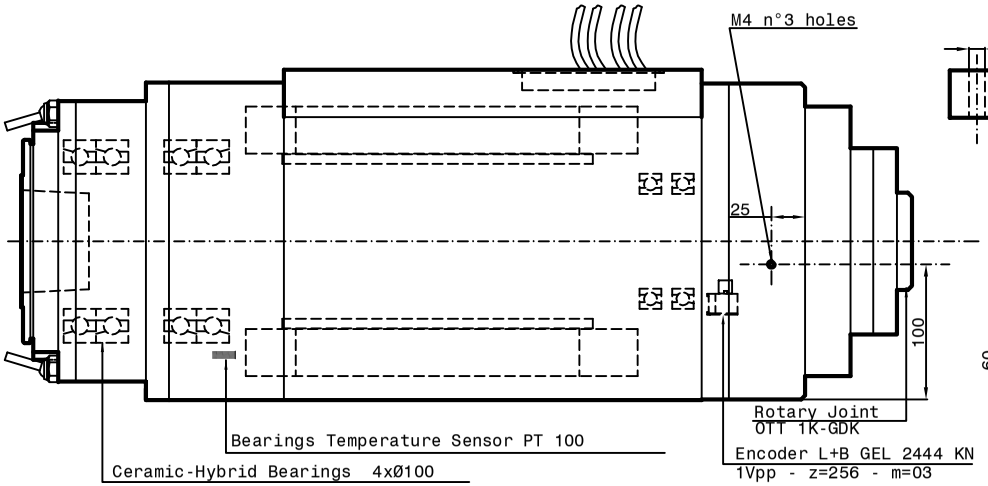

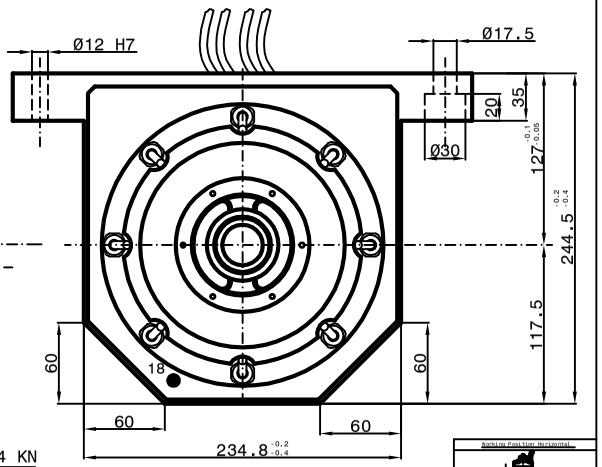

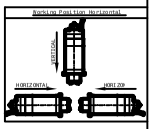

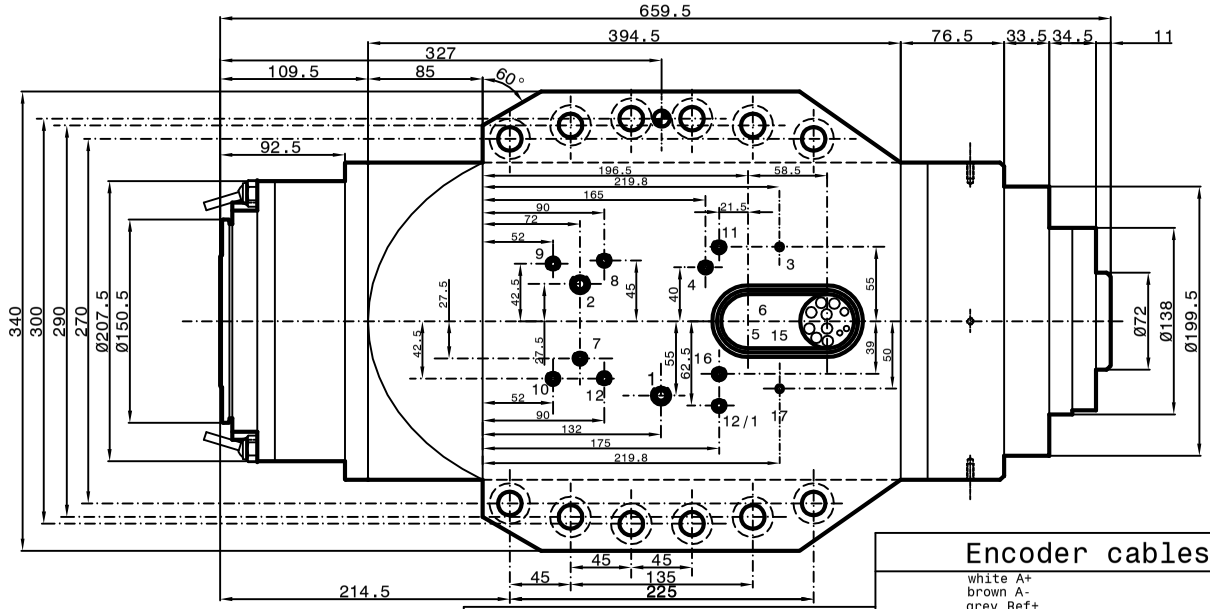

Internal Connector 15 pin

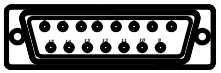

Signal encoder
1 = white A+
2 = brown A-
3 = pinck B+
4 = black B-
5 = grey R+
6 = yellow R-
7 = red +5v
8 = blue 0v
9 = green +5v Sense
screen on carcass

Signal sensori
10 = brown+24v
11 = blue 0v
12 = black S1
13 = black S2
14 = black S5
15 = not connect

SPEED	RPM	1000	1720	8000	15000
FREQUENCY	Hz	37	59	267	500
POWER (S1)	KW	15	15	15	6
TORQUE (S1)	Nm	143	83	18	4
TENSION (S1)	V	240	380	380	380
CURRENTE (S1)	A	50	37	29	13

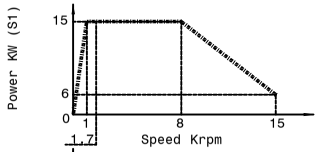

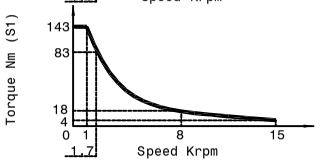

Asyncronous motor:4 poles
Runout taper 0.002mm

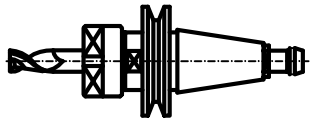

Tool holder ISO/BT 50

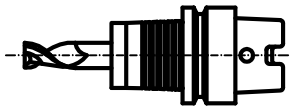

Tool holder HSK A 100
DIN 69893

Air-Oil Bearings Lubrication
Mobil DTE LIght ISO VG 32
Cooling capacity=2450 Watt

1-Coolant inlet (G1/4")(3-4 bar)(6÷7 l/min.)
2-Coolant outlet (G1/4")
3-Hydraulic pressure unclamping
tool (min 80bar - max 90bar) (Ø5)
4-Inlet air pressure clamping
tool (Return piston)(6bar max) (G1/8")
5-Elettric connection (L=2000)
3 Phases motor - Earth
Phases motor U n°2 cables 6mm²
Phases motor V n°2 cables 6mm²
Phases motor W n°2 cables 6mm²
Earth U n°2 cables 4.5mm²
-Outlet sensor's cables (S1-S2-S5)(L=2000mm)
S1 PNP = Toolholders clamped Ø4
S2 PNP = Piston under pressure ready
to receive tools arbor Ø4
The electrospindle can not turn.
S5 PNP = Sensor return piston Ø4
-PT 100 Bearing's temperature sensor
-Outlet encoder's cables (Gel 2444 KN)(L=2000mm)
-Motor thermal switch (N°1 PT 1000)
7-Front-side pressurization filtred (5µm)
(1-1.5 bar) (G1/8")
8-Tool cooling water (G1/8")(20 bar)
9-Front bearings lubrication -1 (G1/8")
10-Front bearings lubrication -2 (G1/8")
11-Rear bearings lubrication (G1/8")
12-Unloading front lubrication bearings (G1/8")
12/1-Unloading rear lubrication bearings (G1/8")
17-Tool's lubro refrigerant inlet by rotary(80 bar)
joint(Ø5)
-Inlet air arbor's cleaning (6 bar)
18-Rotary joint leackage outlet

Encoder cables

white A+
brown A-
grey Ref+
blue 0V
white-red
thermal switch PT1000
white-red
thermal switch PT1000
red +5V Dc
pinck B+
black B-
yellow Ref-
green 5V sensor
screen on carcass

Signal cables

brown +24 V DC
blue 0 V DC
black S1 segnale
black S2 segnale
black S5 segnale
PT 100
PT 100

Motor cables

blue phase V n°2 cables Ø6mm²
black phase W n°2 cables Ø6mm²
brown U n°2 cables Ø6mm²
yellow-green Earth n°2 cables Ø4.5mm²

Peron Speed INTERNATIONAL

SUBJECT:PSI ES-209

CUSTOMER:

Sheet:1/1 | Dis.n°4653-00 | DATE :