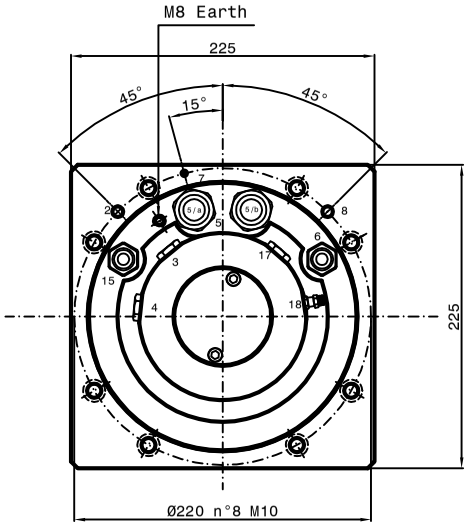

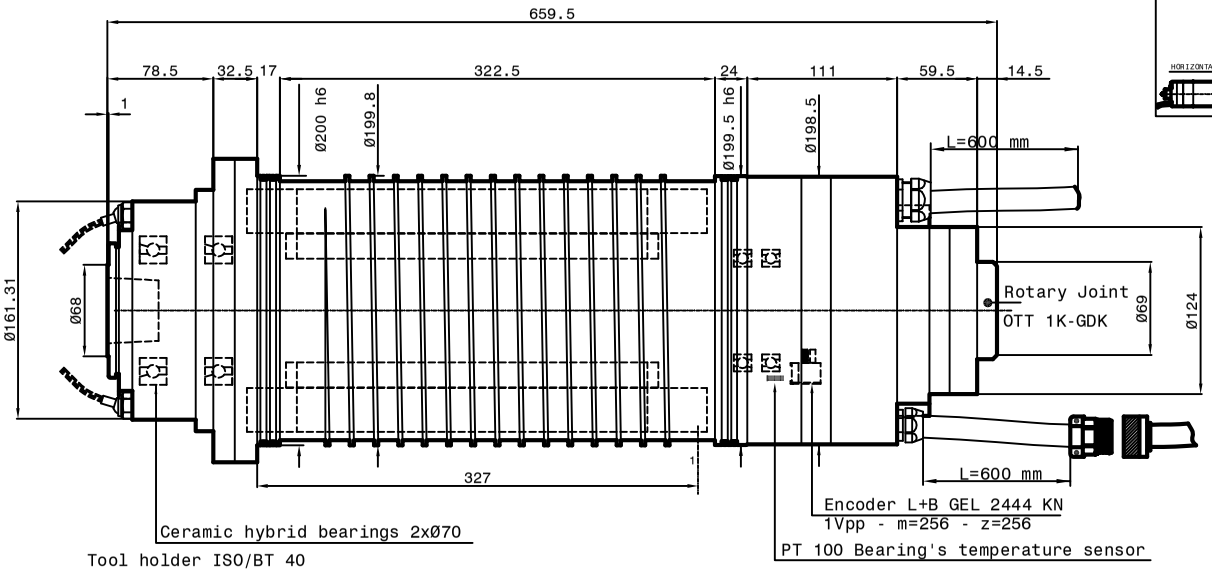

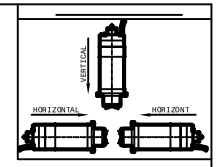

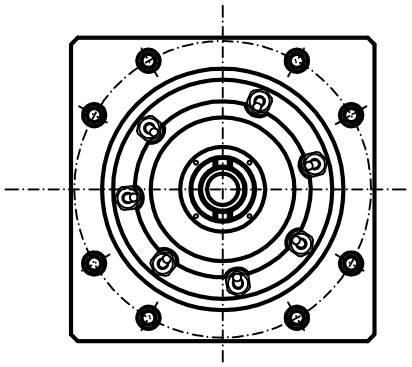

Tool holder ISO/BT 40

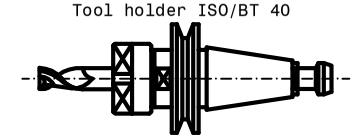

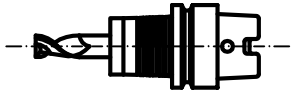

Tool holder HSK A 63
DIN 69893

Cooling capacity=4150 Watt
Grease Bearings Lubrication

SPEED	RPM	1000	2000	2700	11000	18000
FREQUENCY	Hz	38	71	93	370	600
POWER (S1)	KW	13	26	26	26	14
TORQUE (S1)	Nm	124	124	91	23	7.6
TENSION (S1)	V	155	290	380	380	380
CURRENT (S1)	A	74	75	62	50	29
POWER (S6-60 %)	KW	15	30	30	30	15
TORQUE (S6-60 %)	Nm	144	144	106.5	28.5	8.2
TENSION (S6-60%)	V	155	290	380	380	380
CURRENT (S6-60%)	A	87	85	70	60	31
POWER (S6-40%)	KW	15	32	32	32	15
TORQUE (S6-40%)	Nm	154	154	113	31.5	8.2
TENSION (S6-40%)	V	155	290	380	380	380
CURRENT (S6-40%)	A	91	89	72	64	31

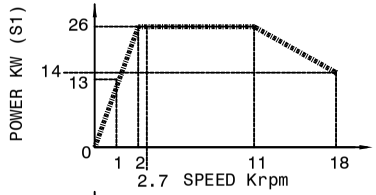

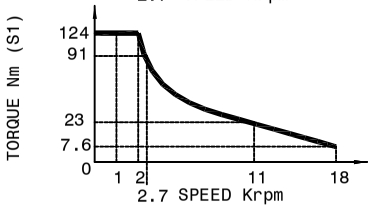

Asyncronus Motor:4 poles Runout taper 0.002mm

1-Coolant inlet (3÷4 bar)(8÷10 L/min.)
2-Coolant outlet (Ø8)
3-Hydraulic pressure unclamping
tool (min 80bar - max 90bar) (G1/4")
4-Hydraulic pressure clamping
tool (Return piston)(10bar max) (G1/4")
5-Elettric connection (L=600mm)
3 Phases motor - Earth
5/a Phases U-V-n°2 cables Ø7mm
5/b Phases W-n°1 cable Ø7mm
6-Outlet sensor's cables (S6)(L=600mm)
S6 = Analogic sensor Balluff
-PT 100 Bearing's temperature sensor
7-Front-side pressurization filtred (5μm)
(1-1.5 bar) (Ø4)
8-Tool cooling water (Ø8)(20 bar)
15-Outlet encoder's cables (Gel 2444 KN)(L=600mm)
-Motor thermal switch (N°1 PT 1000)
17-Tool's lubro refrigerant inlet by rotary(80 bar)
joint(G1/4")
-Inlet air arbor's cleaning (6 bar)
18-Rotary joint leackage outlet (G1/8")

15

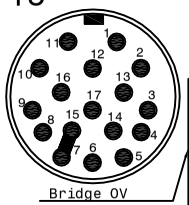

screen on carcass

1 white A+
2 brown A-
3 grey Ref+
4 not connected
5 not connected
6 not connected
7 blue OV
8 white-brown
thermal switch PT 1000
9 white-brown
thermal switch PT 1000
10 red +5V Dc
11 pink B+
12 black B-
13 yellow Ref-
14 not connected
15 not connected
16 green 5V sensor
17 not connected

6

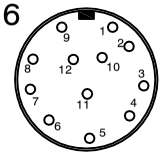

1 brown +24 V DC
2 blue 0 V DC
3 not connected
4 not connected
5 not connected
6 not connected
7 rear PT 100
8 black S6 signal
9 rear PT 100
10 not connected
11 not connected
12 not connected

Peron Speed INTERNATIONAL

SUBJECT:PSI TCV-S-202
CUSTOMER:

Sheet:1/1 | DIS.N°6073-00 | DATE : 16/08/2022