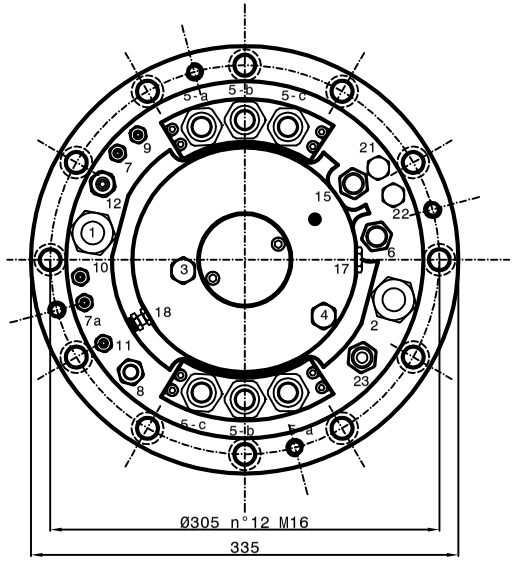

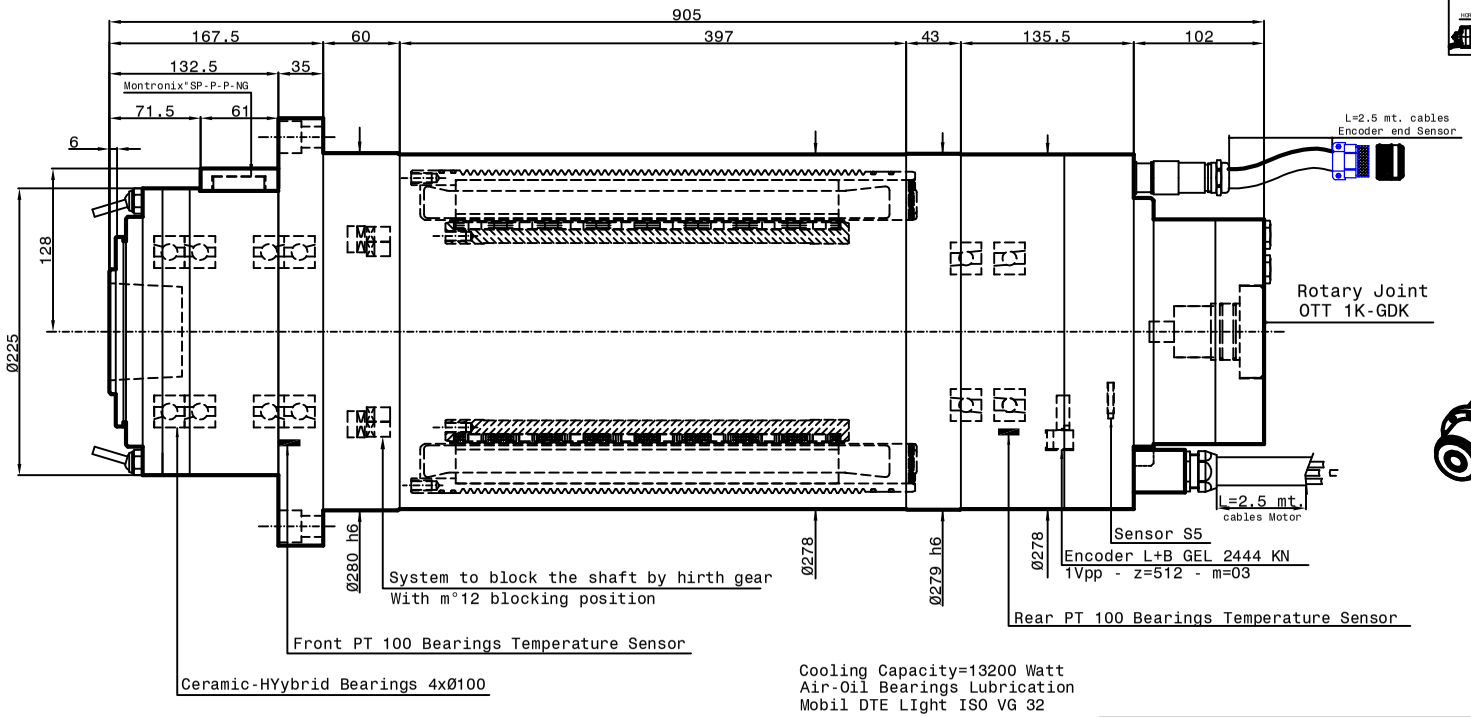

Cooling Capacity=13200 Watt
Air-Oil Bearings Lubrication
Mobil DTE LIght ISO VG 32

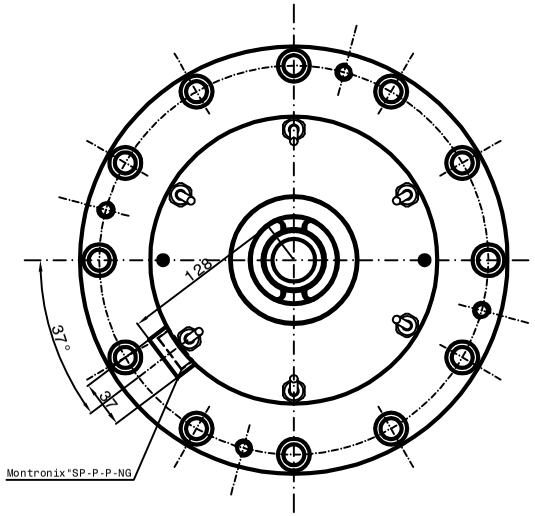

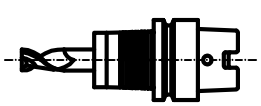

Tool Holder HSK-A100
DIN 69893

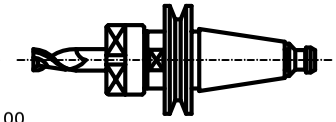

Tool holder ISO/BT 50

15

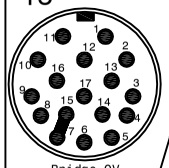

screen on carcass

1 white A+
2 brown A-
3 grey Ref+
4 not connected
5 not connected
6 not connected
7 blue OV
8 white-red thermal switch PT 1000
9 white-red thermal switch PT 1000
10 red +5V Dc
11 pink B+
12 black B-
13 yellow Ref-
14 not connected
15 blue OV
16 green 5V sensor
17 not connected

6

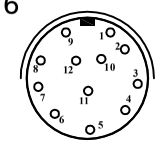

1 brown +24 V DC
2 blue 0 V DC
3 not connected
4 black S5 signal
5 black S7 signal
6 black S8 signal
7 rear PT 100
8 black S6 signal
9 rear PT 100
10 front PT 100
11 not connected
12 front PT 100

1-Coolant inlet (G1/2")(3÷4bar)(17÷18 l/min.)
2-Coolant outlet (G1/2")
3-Hydraulic pressure unclamping tool (50bar min. 90bar max) (G3/8")
4-Hydraulic pressure clamping tool (50bar max) (G3/8")
5-Elettric connection L=2.5mt.
3Phases motor - Earth
Phase V Ø 11 n°2 cables + Earth Ø 10 n°2 cables
Phase W Ø 11 n°2 cables
Phase U Ø 11 n°2 cables
6-Outlet sensor's cables (S5-S6-S7-S8)L=2.5 mt.
S5 NPN = Resting piston
S6 = Analogic Sensor
S7 = Sensor shaft to block
S8 = Sensor shaft unblock
PT 100 bearing's temperature sensor
7-Front-side pressurization (1.5-2 bar) filtred air continuos (0.5μ)(G1/8")
7/a-Inlet air pressurization motor (1.5-2 bar) filtred air continuos (0.5μ)(G1/8")
8-Tool cooling (G1/2") (20 bar)
9-Front bearings lubrication-1(G1/8")
10-Front bearings lubrication-2(G1/8")
11-Rear bearings lubrication (G1/8")
12-Unloading lubrication rear bearings (G1/4") through aspiration type Festo VAD 1/4 (6 bar)
15-Outlet encoder's cables (Gel 2444 KN)(L=2.5 mt.)
Motor thermal switch (N°1 PT 1000)
17-Tool's lubro refrigerant inlet by rotary joint (G1/4") max 80 bar
-Inlet air arbor's cleaning (6bar
18-Rotary joint leackage outlet (G1/8")
21-Oil inlet to block the shaft (60bar)(G1/4")
22-Oil inlet to unblock the shaft (60bar)(G1/4")
23-Outlet cables Montronix Spectra pulse

SPEED	RPM	1000	3300	10000
FREQUENCY	Hz	133	440	1250
POWER (S1)	KW	70.93	70.93	70.93
TORQUEE (S1)	Nm	601	182	68
TENSION (S1)	V	342	425	425
CURRENT (S1)	A	175	107	143
POWER (S6-40% 60" sec.)	KW	72	72	72
TORQUE (S6-40% 60" sec.)	Nm	724	220	90
TENSION (S6-40% 60" sec.)	V	342	425	425
CURRENT (S6-40% 60" sec.)	A	Courant max 250		

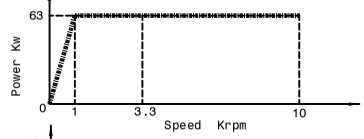

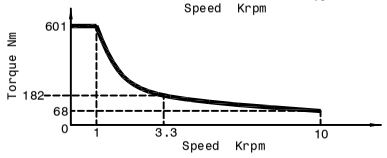

Asyncronous motor:16 poles

Runout taper 0.002mm

Peron Speed INTERNATIONAL

SUBJECT:PSI TCV-T-213

CUSTOMER:

Sheet:1/1 | Dis.n°6011-00 | DATE : 19/08/2022