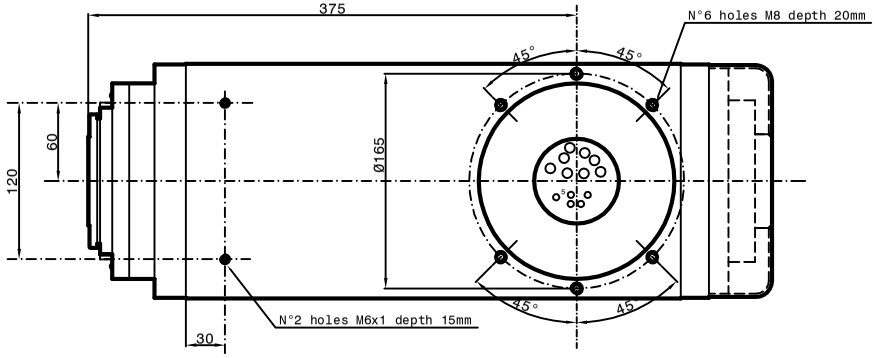

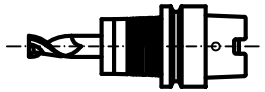

Tool holder HSK A 63
DIN 69893

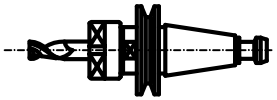

Tool holder ISO/BT 40

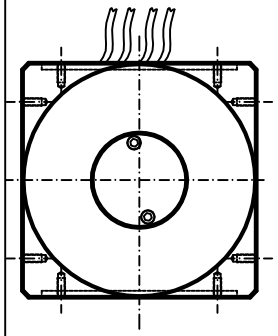

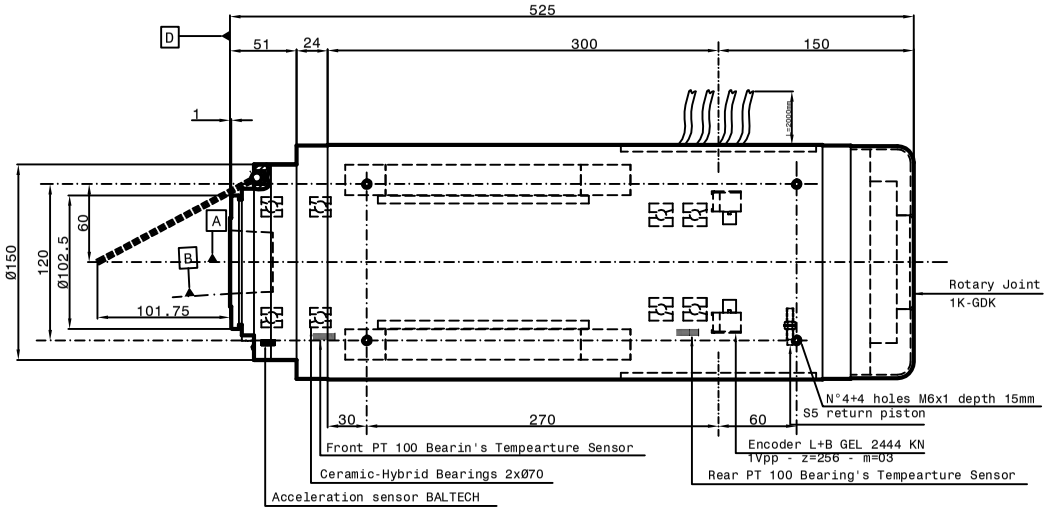

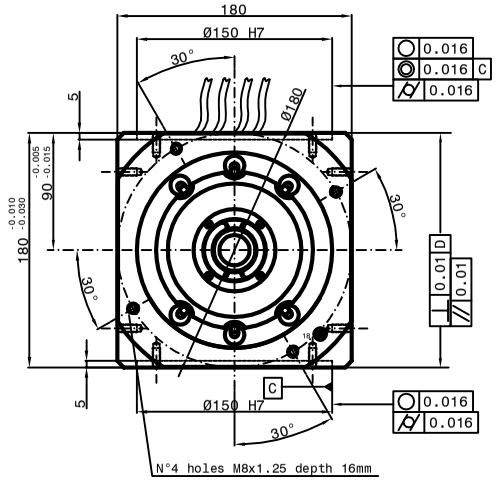

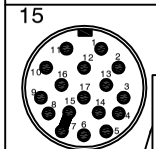

15

1 white A+
2 brown A-
3 grey Ref+
4 not connected
5 not connected
6 not connected
7 blue 0V
8 white-red thermal switch PT 1000
9 white-red thermal switch PT 1000
10 red +5V Dc
11 pink B+
12 black B-
13 yellow Ref-
14 not connected
15 blue 0V
16 green 5V sensor
17 not connected

Bridge 0V

screen on carcass

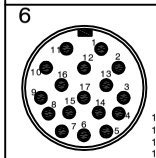

6

1 white front PT 100
2 red front PT 100
3 red front PT 100
4 white rear PT 100
5 red rear PT 100
6 red rear PT 100
7 blue 0 V DC
8 brown + 24 V DC
9 not connected
10 black S5 return piston
11 black S1 sensor
12 black S2 sensor
13 not connected
14 blackS 4 sensor
15 not connected
16 not connected
17 not connected

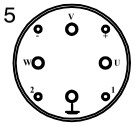

5

V blue phase V
W black phase W
U brown phase U
⏚ yellow-green Earth
1 not connected
2 not connected
- not connected
+ not connected

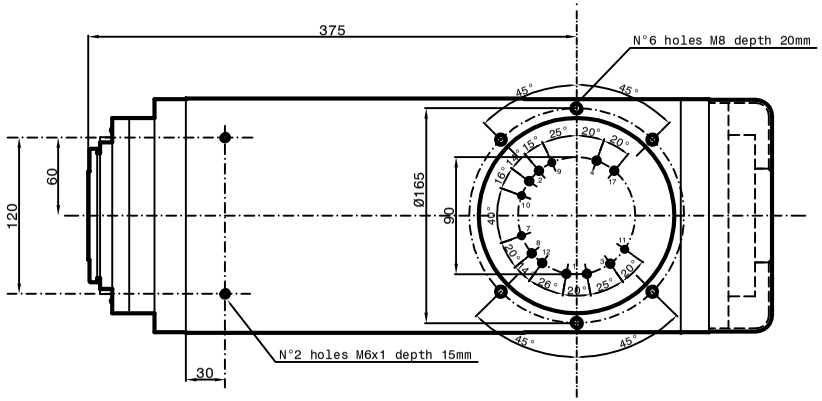

Air-Oil Bearings Lubrication
Mobil DTE LIght ISO VG 32
Cooling capacity=4650 Watt

1-Coolant inlet (2xØ5)(3-4 bar)(8÷9 L/min.)
2-Coolant outlet (2xØ5)
3-Hydraulic pressure unclamping
tool (min 80bar - max 90bar) (Ø5)
4-Hydraulic pressure clamping
tool (Return piston)(10bar max) (Ø5)
5-Elettric connection (L=2000)
3 Phases motor - Earth
Phases motor U n°2 cables Ø6.5
Phases motor V n°2 cables Ø6.5
Phases motor W n°2 cables Ø6.5
Earth n°2 cables Ø6.5
-Outlet sensor's cables (S1-S2-S4-S5)(L=2000mm)
S1 PNP = Toolholders clamped Ø4
S2 PNP = Piston under pressure ready
to receive tools arbor Ø4
The electrospindle can not turn.
S4 PNP = Toolholders not clamped Ø4
The electrospindle cannot turn.
S5 PNP = Sensor return piston Ø4
-PT 100 Bearing's temperature sensor
-Outlet encoder's cables (Gel 2444 KN) Ø6(L=2000mm)
-Motor thermal switch (N°1 PT 1000)
-Outlet Baltech sensor Ø6(L=2000mm)
7-Front-side pressurization filtred (5μm)
(1-1.5 bar) (Ø4)
8-Tool cooling water (Ø5)(20 bar)
9-Front bearings lubrication -1 (Ø4)
10-Front bearings lubrication -2 (Ø4)
11-Rear bearings lubrication (Ø4)
12-Unloading lubrication bearings (Ø5)
17-Tool's lubro refrigerant inlet by rotary(80 bar)
joint(Ø5)
-Inlet air arbor's cleaning (6 bar)
18-Rotary joint leackage outlet

SPEED	RPM	4000	10000	24000
FREQUENCY	Hz	200	505	1200
POWER (S1)	KW	30	30	30
TORQUE (S1)	Nm	72	28	12
TENSION (S1)	V	260	380	380
CURRENT (S1)	A	150	61	53
POWER (S6-40% 2 min)	KW	37	37	37
TORQUE (S6-40% 2 min.)	Nm	88	42	15
TENSION (S6-40% 2 min.)	V	310	380	380
CURRENT (S6-40% 2 min.)	A	185	89	62

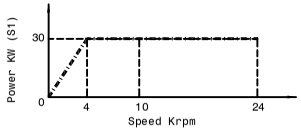

Choke = 0.5 mH/phas

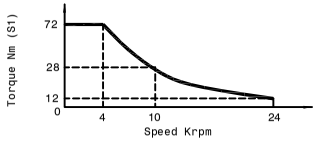

Syncronus Motor:6 poles
Runout taper 0.002 mm

Peron Speed

SUBJECT:PSI ES-111
CUSTOMER:

Sheet:1/1 | DIS.N°3990-00-16/A | DATE :