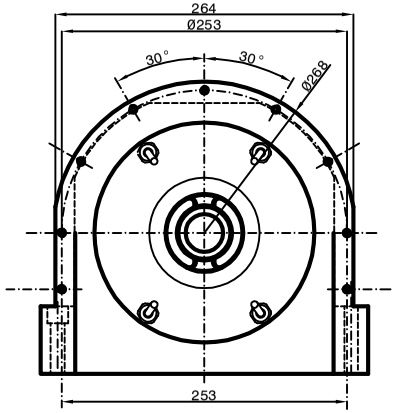

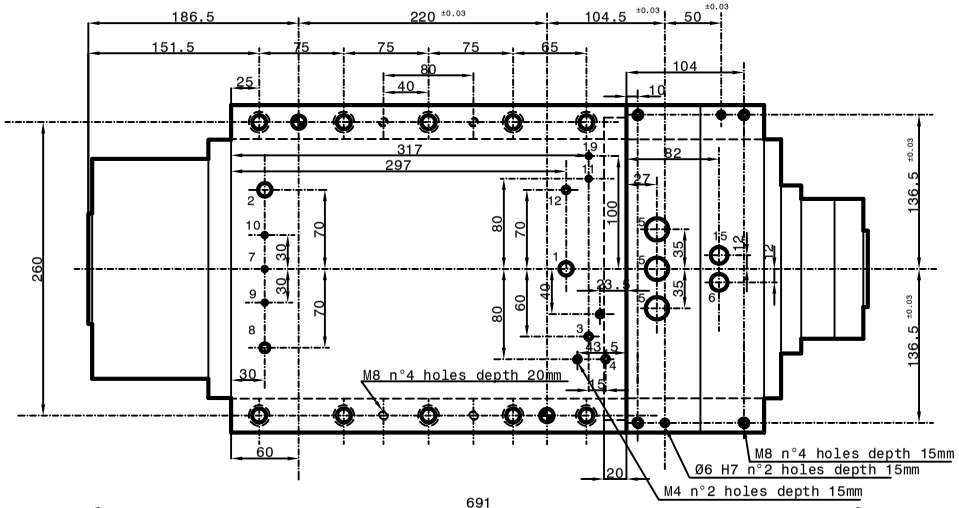

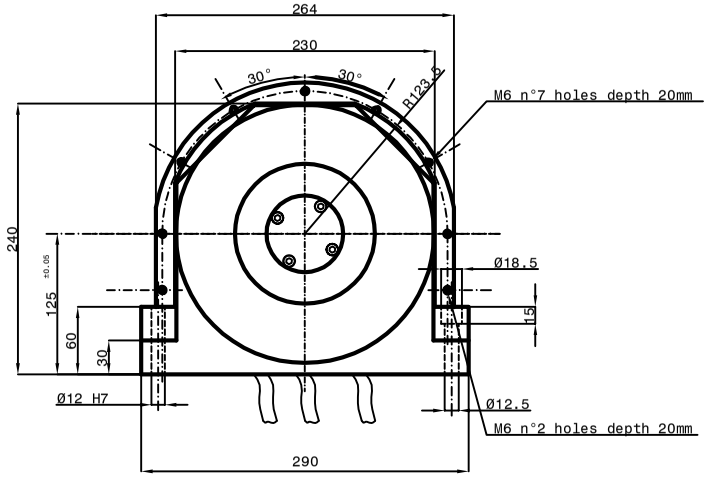

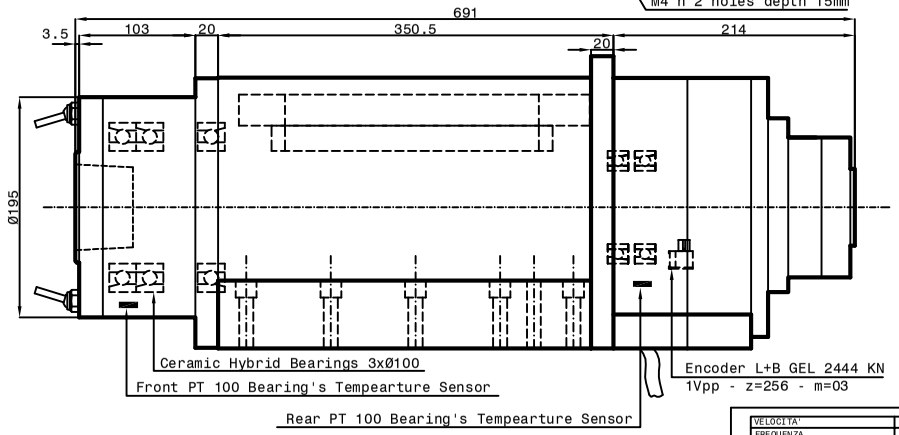

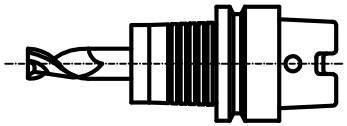

Tool holder HSK A 100
DIN 69893

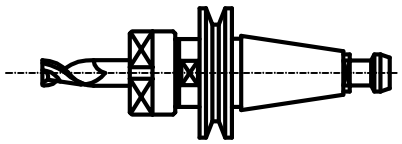

Tool holder ISO/BT 50

Air-Oil Bearings Lubrication
Mobil DTE LIght ISO VG 32
Cooling capacity=6450 Watt

1-Coolant inlet (Ø12)(3-4 bar)(12 L/min.)
2-Coolant outlet (Ø12)
3-Hydraulic pressure unclamping
tool (min 80bar - max 90bar) (Ø6)
4-Hydraulic pressure clamping
tool (Return piston)(10bar max) (Ø6)
5-Elettric connection (L=2000)
3 Phases motor - Earth
Phases motor U n°2 cables Ø6
Phases motor V n°2 cables Ø6
Phases motor W n°2 cables Ø6
Earth n°2 cables Ø6
6-Outlet sensor's cables (S1-S2-S4-S5)(L=2000mm)
S1 PNP = Toolholders clamped Ø4
S2 PNP = Piston under pressure ready
to receive tools arbor Ø4
The electrospindle can not turn.
S4 PNP = Toolholders not clamped Ø4
The electrospindle cannot turn.
S5 PNP = Sensor return piston Ø4
-PT 100 Bearing's temperature sensor
7-Front-side pressurization filtred (5μm)
(1-1.5 bar) (Ø4)
8-Tool cooling water (Ø8)(20 bar)
9-Front bearings lubrication -1 (Ø4)
10-Front bearings lubrication -2 (Ø4)
11-Rear bearings lubrication (Ø4)
12-Unloading lubrication bearings (Ø6)
15-Outlet encoder's cables (Gel 2444 KN)(L=2000mm)
-Motor thermal switch (N°1 PT 1000)
19-Inlet air arbor's cleaning (6 bar)(Ø4)

15

1 white A+
2 brown A-
3 grey Ref+
4 not connected
5 not connected
6 not connected
7 blue 0V
8 white-red
thermal switch PT 1000
9 white-red
thermal switch PT 1000
10 red +5V Dc
11 pink B+
12 black B-
13 yellow Ref-
14 not connected
15 blue 0V
16 green 5V sensor

6

1 brown +24 V DC
2 blue 0 V DC
3 black S1 signal
4 black S2 signal
5 not connected
6 black S4 signal
7 rear PT 100
8 black S4 signal
9 rear PT 100
10 not connected
11 not connected
12 not connected

VELOCITA'	RPM	1000	2200	3500	11000	18000
FREQUENZA	Hz	71	155	236	770	1200
POTENZA (S1)	KW	18.2	42	42	42	23
COPPIA (S1)	Nm	200	200	135	43	11
TENSIONE (S1)	V	115	250	380	380	380
CORRENTE (S1)	A	134	134	101	85	50

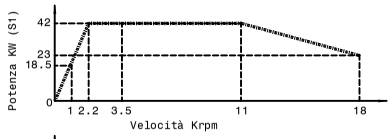

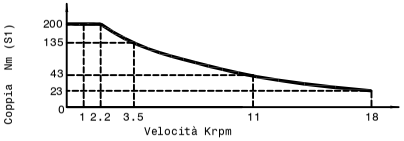

Asyncronous motor:8 poles
Runout taper 0.002mm

Peron Speed ENGINEERING

OGGETTO:PSI ES-205
CUSTOMER:

Sheet:1/1 | Dis.n°3623-00-05 | DATE :